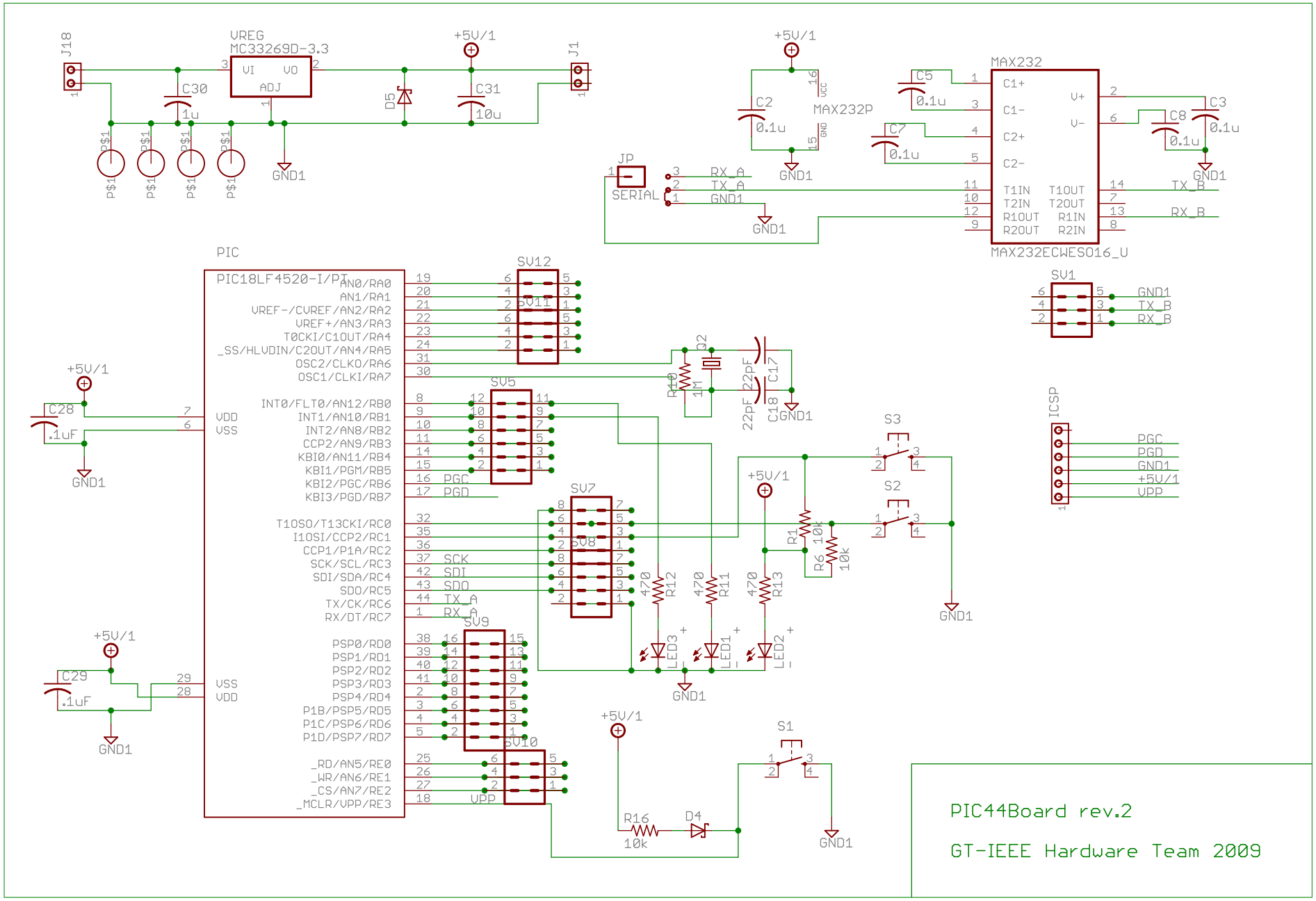
J18
VREG
MC33269D-3.3
VI
VO
ADJ
C30
1u
D5
+5V/1
C31
10u
J1
P$1
GND1
+5V/1
C2
0.1u
MAX232P
VCC
GND
GND1
MAX232
C5
0.1u
C7
0.1u
C1+
C1-
C2+
C2-
V+
V-
C3
0.1u
C8
0.1u
GND1
T1IN
T2IN
R1OUT
R2OUT
T1OUT
T2OUT
R1IN
R2IN
TX_B
RX_B
MAX232ECWES016_U
JP
SERIAL
RX_A
TX_A
GND1
PIC
PIC18LF4520-I/PT
AN0/RA0
AN1/RA1
VREF-/CVREF/AN2/RA2
VREF+/AN3/RA3
T0CKI/C1OUT/RA4
_SS/HLVDIN/C2OUT/AN4/RA5
OSC2/CLKO/RA6
OSC1/CLKI/RA7
INT0/FLT0/AN12/RB0
INT1/AN10/RB1
INT2/AN8/RB2
CCP2/AN9/RB3
KBI0/AN11/RB4
KBI1/PGM/RB5
KBI2/PGC/RB6
KBI3/PGD/RB7
T1OSO/T13CKI/RC0
I1OSI/CCP2/RC1
CCP1/P1A/RC2
SCK/SCL/RC3
SDI/SDA/RC4
SDO/RC5
TX/CK/RC6
RX/DT/RC7
PSP0/RD0
PSP1/RD1
PSP2/RD2
PSP3/RD3
PSP4/RD4
P1B/PSP5/RD5
P1C/PSP6/RD6
P1D/PSP7/RD7
_RD/AN5/RE0
_WR/AN6/RE1
_CS/AN7/RE2
_MCLR/VPP/RE3
VDD
VSS
PGC
PGD
SCK
SDI
SDO
TX_A
RX_A
VPP
SV12
SV11
SV5
SV7
SV8
SV9
SV10
SV1
GND1
TX_B
RX_B
+5V/1
C28
.1uF
GND1
+5V/1
C29
.1uF
GND1
R10
1M
Q2
22pF
C17
22pF
C18
GND1
ICSP
PGC
PGD
GND1
+5V/1
VPP
S3
S2
+5V/1
R1
10k
R6
10k
GND1
470
R12
470
R11
470
R13
LED3
LED1
LED2
GND1
+5V/1
R16
10k
D4
S1
GND1
PIC44Board rev.2
GT-IEEE Hardware Team 2009